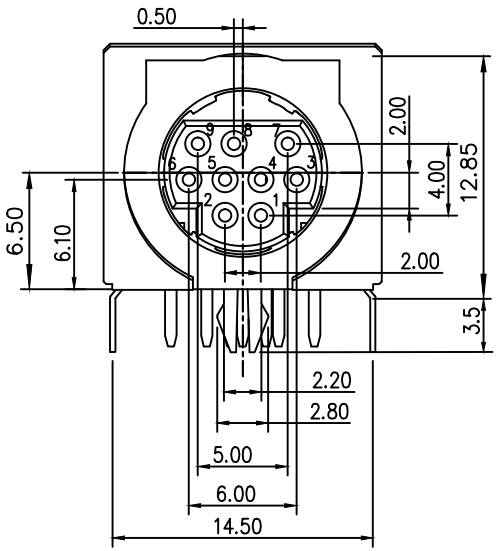


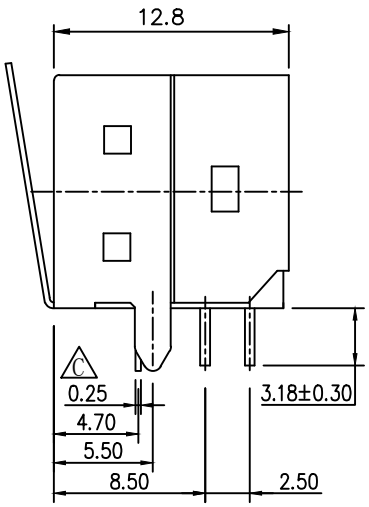


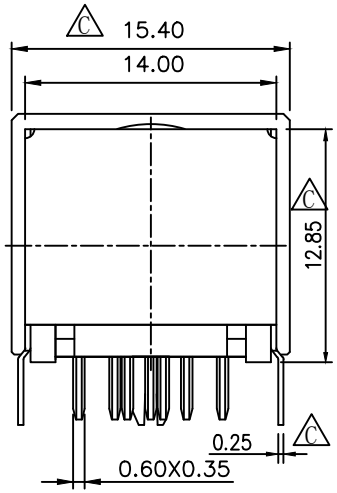


NOTES:

1. MATERIAL:
   1.1 HOUSING: PBT,UL94 V-0, COLOR: BLACK.
   1.2 CONTACTS: C2680 (T=0.25mm)
   1.3 SHELL: SPCC (T=0.25mm)
   1.4 GROUNDING: SUS301 (T=0.20mm)
2. PLATING:
   2.1 CONTACTS:
   NICKEL(50u" MIN.) UNDER PLATING OVERALL
   TIN(80u" MIN.) PLATING ON SOLDER AREA
   AU(Gold Flash.) PLATING ON CONTACT AREA
   2.2 SHELL: NICKEL(50u" MIN.) PLATING OVER
   Cu(50u" MIN.) UNDER PLATING OVERALL
3. ELECTRCAL CHARACTERISTICS:
   3.1 CONTACT CURRENT RATING:1.5A
   3.2 DIELECTRIC WITHSTANDING VOLTAGE: 500V AC R.M.S
   3.3 INSULATION RESISTANCE:1000MΩ MINIMUM AT DC 500V
   3.4 CONTACT RESISTANCE:30mΩ MAX
4. MATING CYELES:500 CYCLES
5. OPERATING TEMPERATURE:-55°~+85°

PART NO.

71 1 - 9 C 5 - 1 24 - L

71 : MID
1 : LAYERS FOR SINGLE

9 : FOR 9 PIN
C : SHELL FOR STEEL ALLOY
5 : COLOR FOR BLACK

1 : PLATING FOR G.F
24 : SERIES NO.

L : FOR LEAD FREE

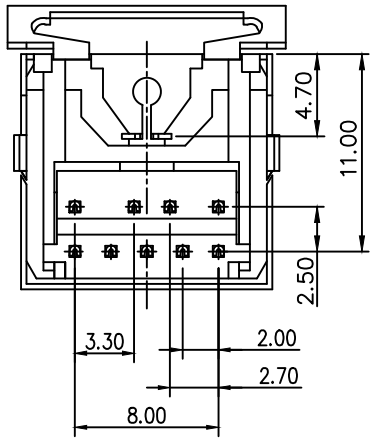


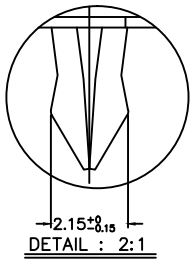


DETAIL : 2:1

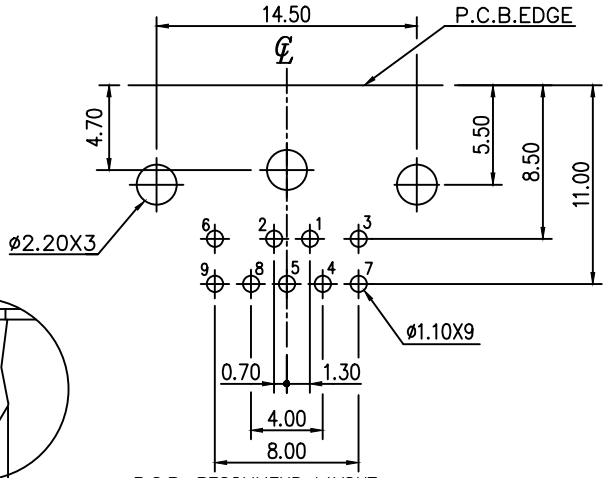


P.C.B. RECOMMEND LAYOUT
(BOTTOM VIEW)

| pin | Name | Description |
|---|---|---|
| 1 | GND | Ground(Y) |
| 2 | GND | Ground(C) |
| 3 | Y | Intersity |
| 4 | Pr | Pr紅色差 |
| 5 | – | – |
| 6 | V | Composite Video |
| 7 | VGND | Composite Ground |
| 8 | Pb | Pb藍色差 |
| 9 | GND | Ground(Pb) |

廷奕科技股份有限公司
VITETECH CO., LTD

| REV. | ECN.NO. | APP. | DATE |
|---|---|---|---|
| A | Official Publish | OW | MAY/25/11 |
| B | Official Publish | Sonia | JUN/02/15 |
| C | Official Publish | Sonia | MAY/13/16 |

RoHS COMPLIANT

DIMENSION CLASSIFICATION
Ⓒ:CRITICAL Ⓜ:MAJOR ( ):REFERENCE

| REVISED | A | | |
|---|---|---|---|
| DRAW | CHK'D | APPROVE | DATE |
| OW | JACK | ALAN | MAY/25/11 |

PRODUCT CUSTOMER COPY
SCALE 1:1 SHEET
UNIT:MM

GENERAL TOLERANCE
X.±0.50 .X ±0.40
.XX ±0.35
.XXX ±0.05
X.' .X'

PART NO: 711-9C5-124-L
DWG NAME:
MINI DIN 9 PIN
有彈片 SUS301